Classic 250

Classic 250 “Monza” Fuel Filler Cap.
Part Number: OJ-ZA-001 (C25D)

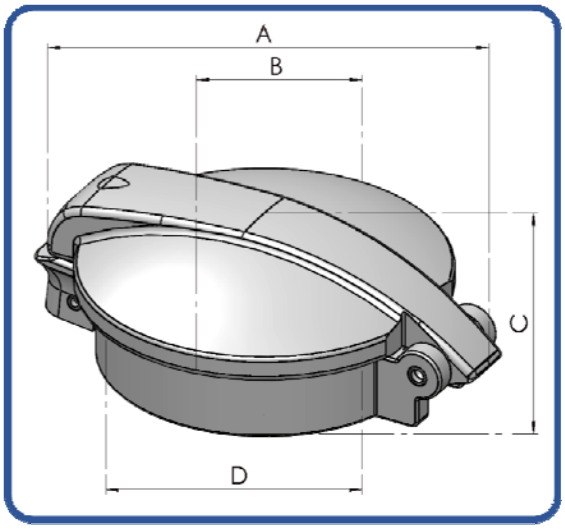

Specifications:

Options:	N/A
Fixing Arrangement:	2.5” x 16TPI WHIT FORM Thread
Applications:	Fuel, Oil & Water Tanks
Compatibilities:	Compatible with Add Blue Operation Temperature -40°C to +80°C
Finish:	Natural Polished
Weight:	126.0 grams
Supplied With:	Fibre Gasket

Materials:

Centre Cap:	Aluminium Alloy LM25 Cast
Flange:	Aluminium Alloy LM25 Cast
O-Ring:	Viton A (FPM or FKM)
Seal Plate:	Brass
Gasket:	Fibre Vulcan

Dimensions:

Length A:	100.0mm
Width B:	76.0mm
Height C:	32.0mm
Thread D:	2.5” x 16TPI WHIT FORM Thread
Bore Diameter:	53.0

Optional(‘s):

Flange
Flange Neck